ZEN
CONSULTANTS, INC.
1662 ROUTE 300, SUITE 138
NEWBURGH, NEW YORK 12550
(845)-629-1567 (office phone)

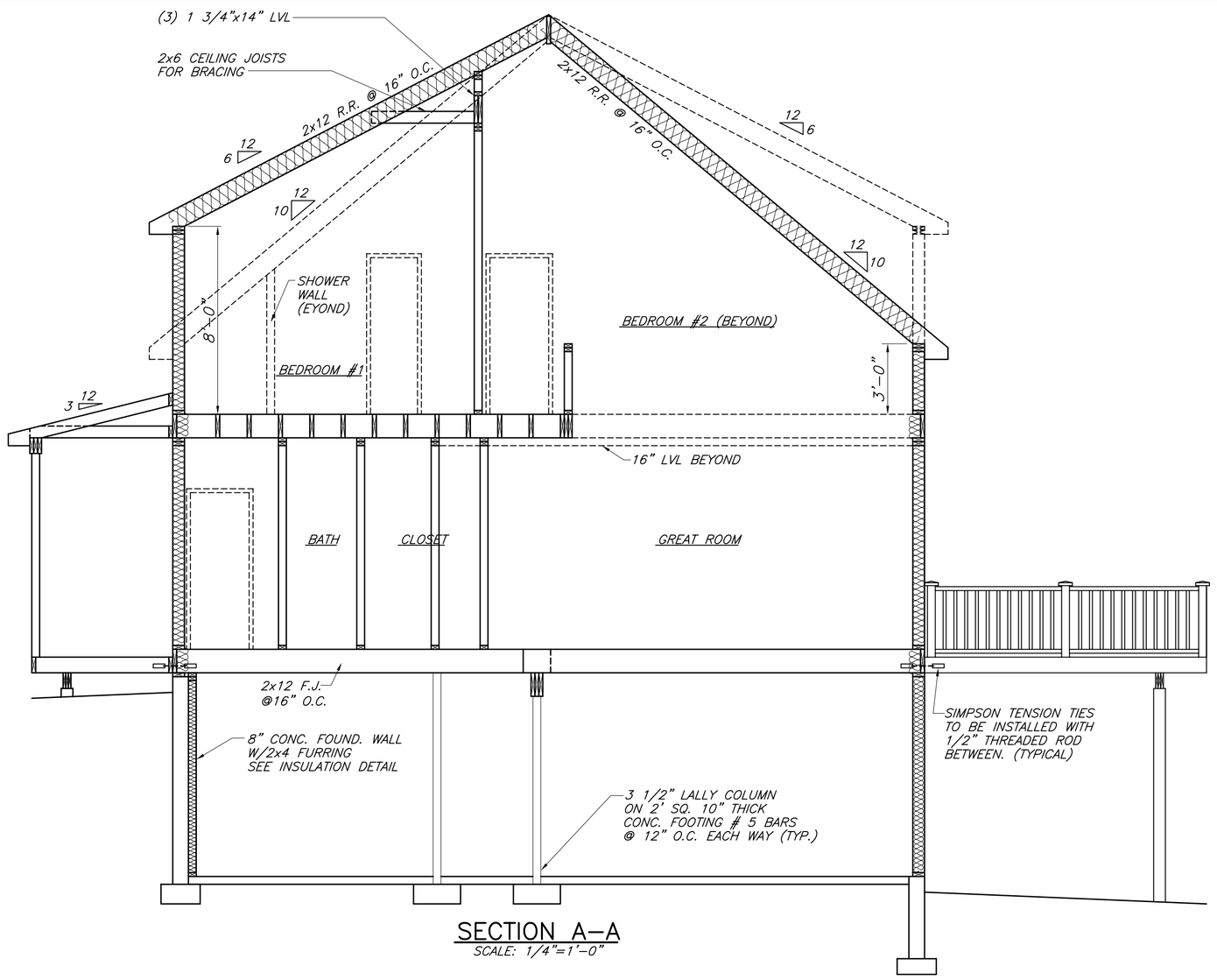

SECTION A–A
SCALE: 1/4"=1'-0"

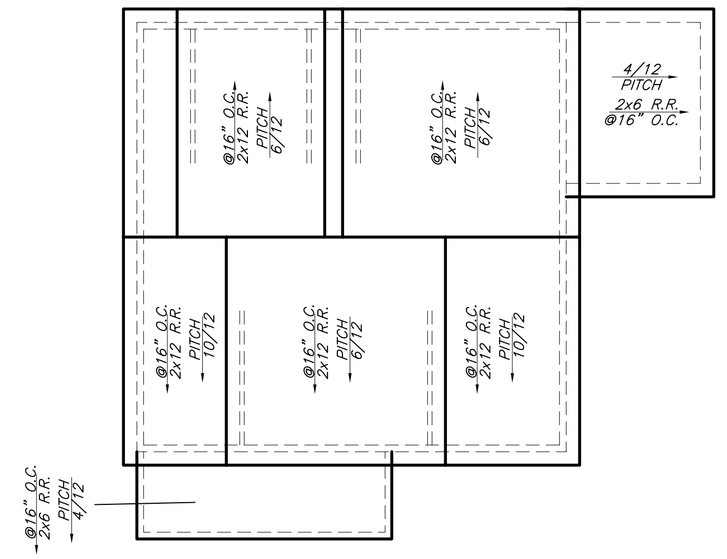

ROOF PLAN
SCALE: 1/8"=1'-0"

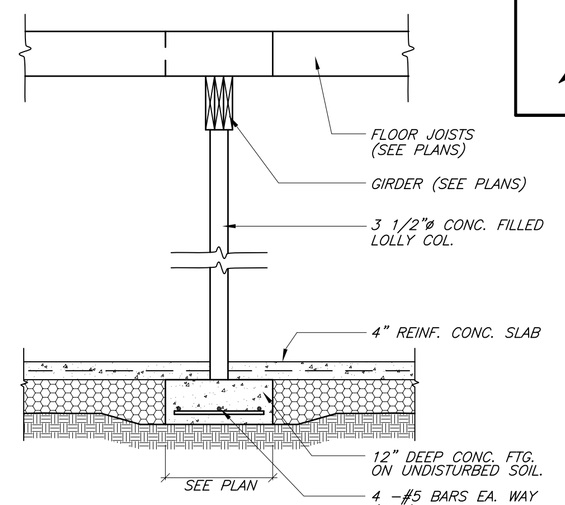

COLUMN DETAIL
N.T.S.

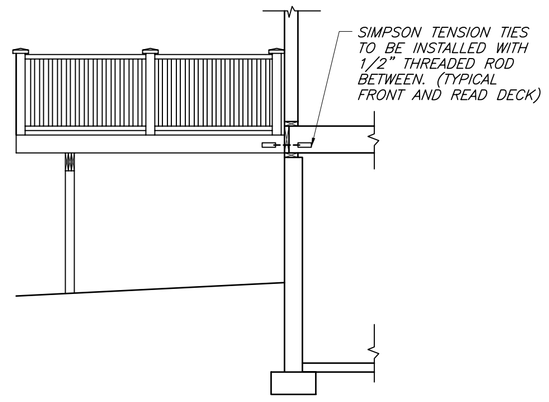

DECK CONNECTION DETAIL
N.T.S.

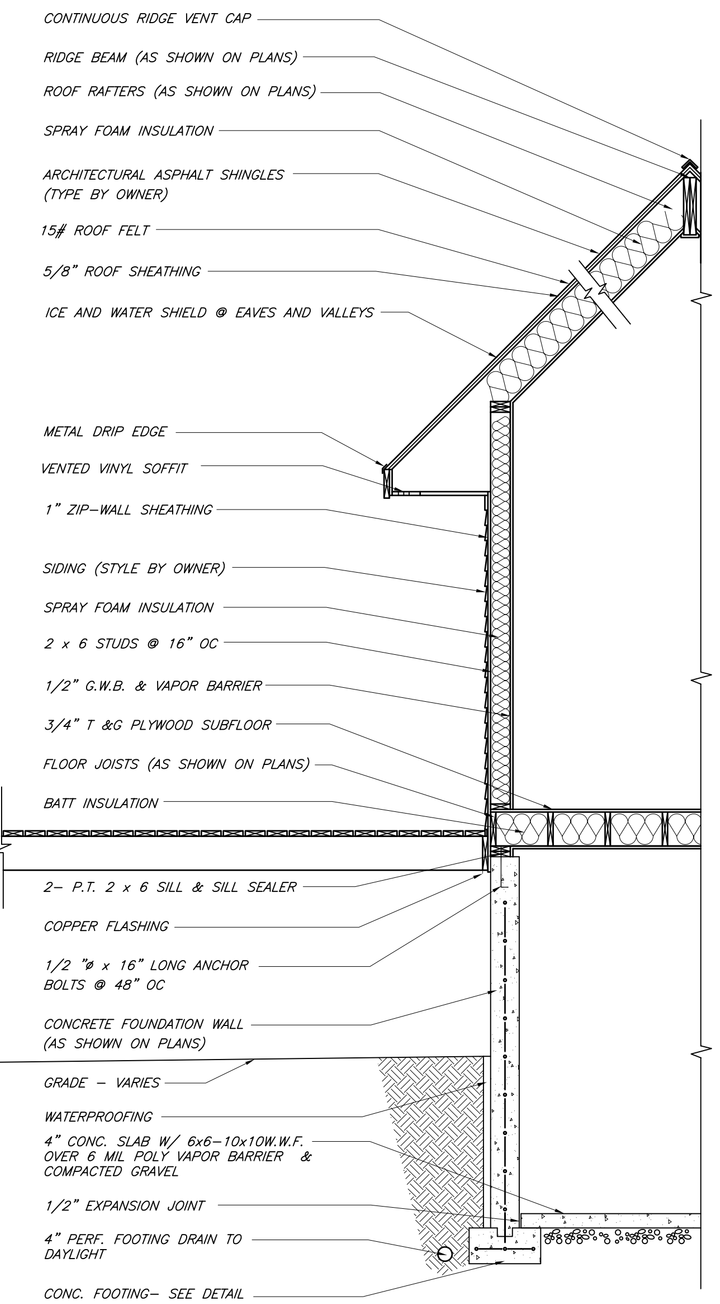

TYPICAL SECTION
1/2"=1'-0"

NOTE:
INDIVIDAL DETAILS SHALL OVERRIDE THE 'TYPICAL SECTION' WHERE APPLICABLE

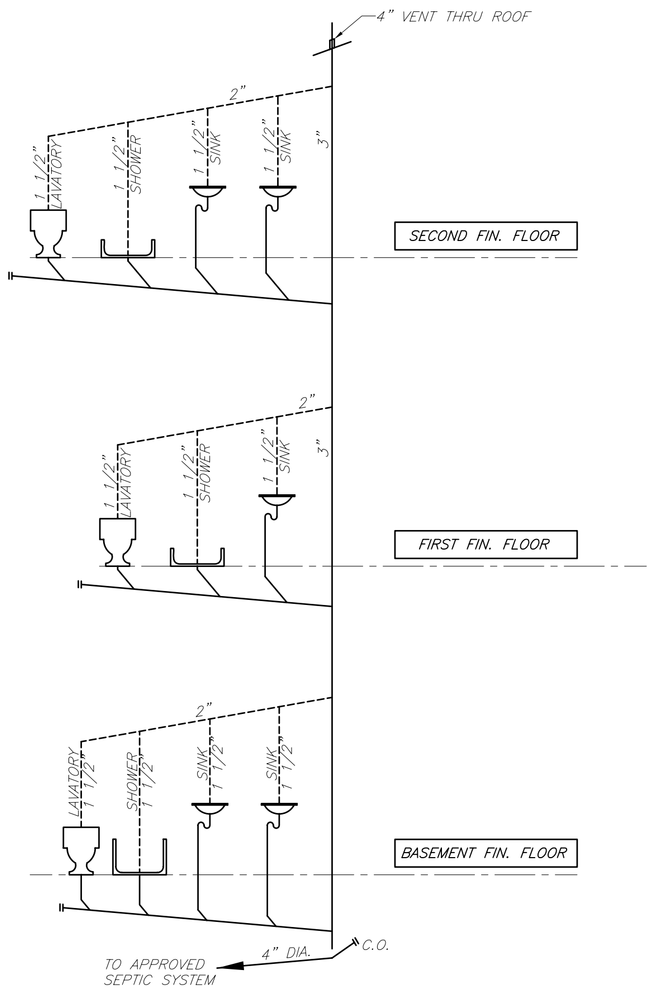

PLUMBING DIAGRAM
N.T.S.

PLUMBING NOTE:
1. WATER TESTING IS REQUIRED ON ALL PLASTIC WASTE/VENT/DRAIN PIPES P2503.5.1
2. WATER HAMMER ARRESTORS REQUIRED IN ACCORDANCE WITH 2020 RCNYS P2903.5

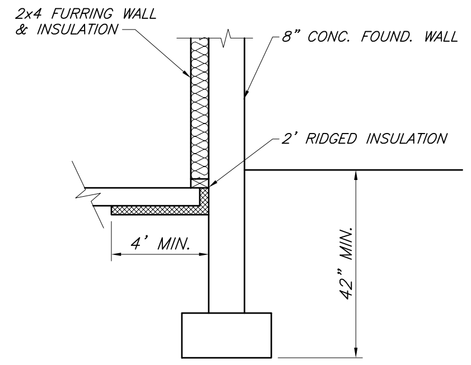

FOUNDATION INSULATION DETAIL
N.T.S.

NOTE:
FIRE/SMOKE STOPPING SHALL BE INSTALLED AS PER CURRENT CODE.

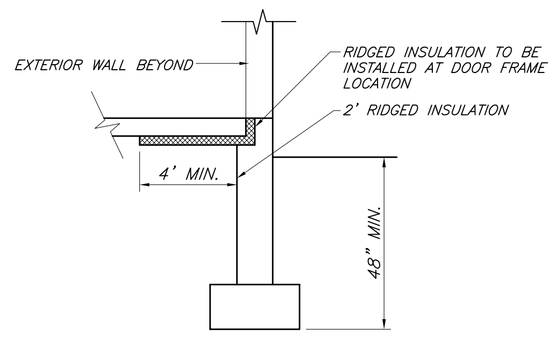

FOUNDATION INSULATION @ DOOR DETAIL
N.T.S.

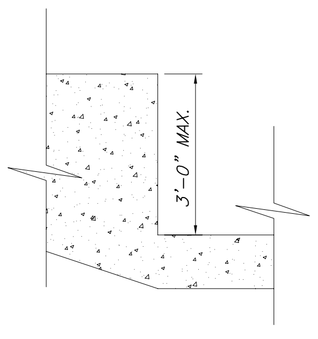

STEPPED FOOTING DETAIL SITE SPECIFIC
N.T.S.

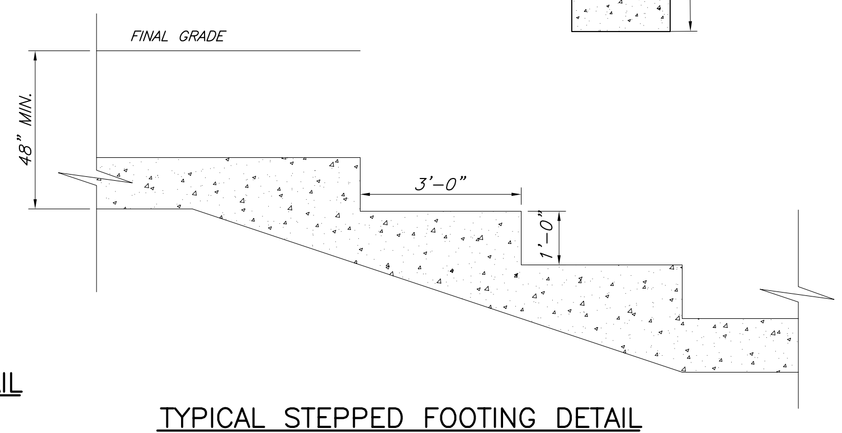

TYPICAL STEPPED FOOTING DETAIL
N.T.S.

WILLIAM J. MOREAU, P.E.
ENGINEER

SPEC RESIDENCE
RHINECLIFF BUILDERS, INC.
MISC DETAILS
15.1–41–19, CROSS PATCH ROAD
TOWN OF WOODSTOCK, NEW YORK

DATE	SCALE		SHEET NUMBER
08/02/2026	1/4"=1'–0"	26–041–WHE	5 OF 6